ALT/DUAL PISTON COMPRESSOR MANUAL REV040422.2

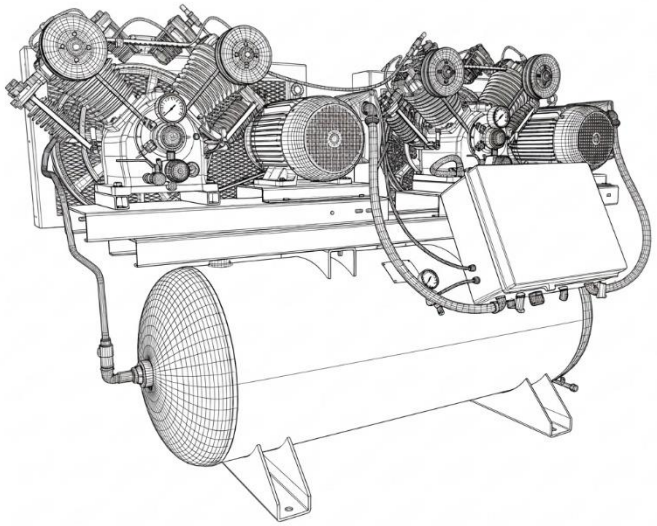

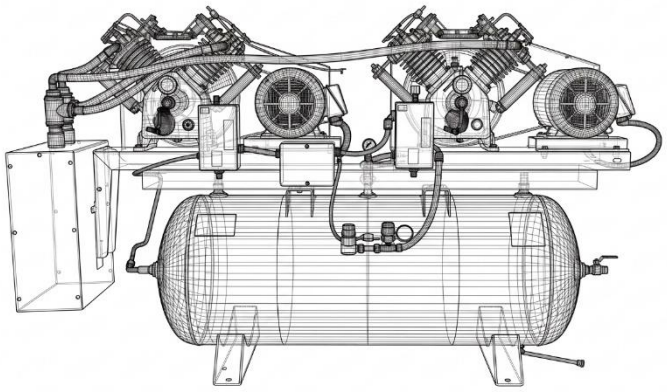

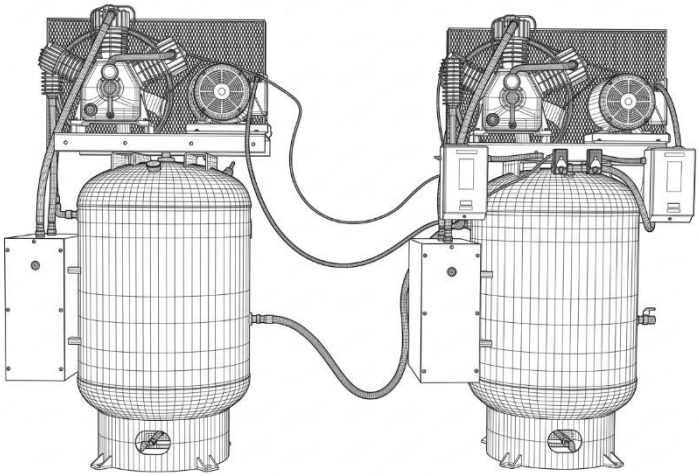

Contents

Safety Information	2-3
Breathable Air	3
Pressurized Components	3
Personal Protective Equipment	3
Basic Nomenclature	4
Features and Extras	5-7
Pump Riser	5
Belt Tensioner	5
Continuous Run	6
Automatic Tank Drain	7
Installation	8-16
Area	8
Lifting and Movement	9
General Lifting	9
Anchoring	10
Electrical	11-13
Piping	14-15
Pre-use Inspection	16
Operation	17
Pump Times	17
Maintenance	18-19
Maintenance Schedule	18-19
Oil Change/Selection	19
Oil Disposal	19
FAQ and Troubleshooting	20
Warranty Information	21-23
Maintenance Log	24

SAFTEY INFORMATION

This manual contains very important information to know and understand. This is to provide for SAFTEY and to PREVENT EQUIPMENT PROBLEMS. To help understand this information, observe the following:

DANGER: Danger indicates and imminently hazardous situation which, if not avoided, will result in death or serious injury.

WARNING: Warning indicates a potentially hazardous situation which if not avoided, could result in death or serious injury.

CAUTION: Caution indicates a potentially hazardous situation which, if not avoided, may result in minor or moderate injury.

NOTICE: Notice indicates important information, that if not followed, may cause damage to equipment.

CALIFORNIA PROPOSITION 65

WARNING: This product or its power cord may contain chemicals known to the state of California to cause cancer and birth defects or other reproductive harm. Wash hands after handling.

1. Allow only trained, authorized persons who have read and understood these operating instructions to use this equipment. Failure to follow the instructions, procedures and safety precautions in this manual can result in accidents and injuries.
2. NEVER start or operate the compressor under unsafe conditions. Tag the compressor, disconnect, and lock out all power to it to prevent accidental start-up until the condition is corrected.
3. Install, use, and operate the compressor only in full compliance with all pertinent OSHA regulations and all applicable Federal, State & Local codes, standards, and regulations.
4. NEVER modify the compressor and/or controls in any way.
5. Keep a first aid kit in a convenient place. Seek medical assistance promptly in case of injury. Avoid infection by caring for any small cuts and burns promptly.

DANGER: Failure to follow instructions and safety guidelines laid out in this manual can result in serious injury or death. Ensure all users of this product read and understand this manual. Store the manual near the compressor for ease of reference. If the manual becomes damaged or illegible contact the manufacturer for a replacement.

Breathable Air

1. **NEVER** use air from this compressor for breathable air except in full compliance with OSHA Standards 29 CFR 1910 and any other Federal, State or Local codes or regulations.
2. **DO NOT** use airline anti-icer systems in air lines supplying respirators or other equipment used to produce breathable air. **DO NOT** discharge air from these systems in unventilated or other confined areas.

DANGER: Death or serious injury can result from inhaling compressed air without using proper safety equipment. See OSHA standards on safety.

Pressurized Components

This equipment is supplied with an ASME designed and rated pressure vessel protected by an ASME rated relief valve. Pull the ring before each use to ensure the valve is functional. **DO NOT** attempt to open the valve while the machine is under pressure. See figure on the right.

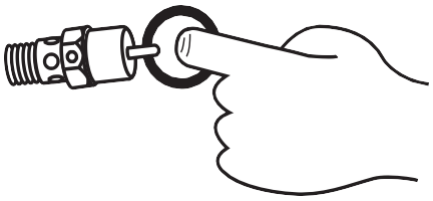

CAUTION: DO NOT PULL WITH PRESSURE IN SYSTEM

Personal Protective Equipment

Be sure all Be sure all operators and others around the compressor and its controls comply with all applicable OSHA, Federal, State and Local regulations, codes, and standards relating to personal protective equipment. This includes respiratory protective equipment, protection for the extremities, protective clothing, protective shields and barriers, electrical protective equipment, and personal hearing protective equipment.

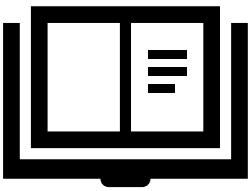

Read all manuals and information supplied for this unit carefully. Be thoroughly familiar with all inspection and operation guidelines. Only persons that have read and understand this manual should operate the compressor.

Basic Nomenclature

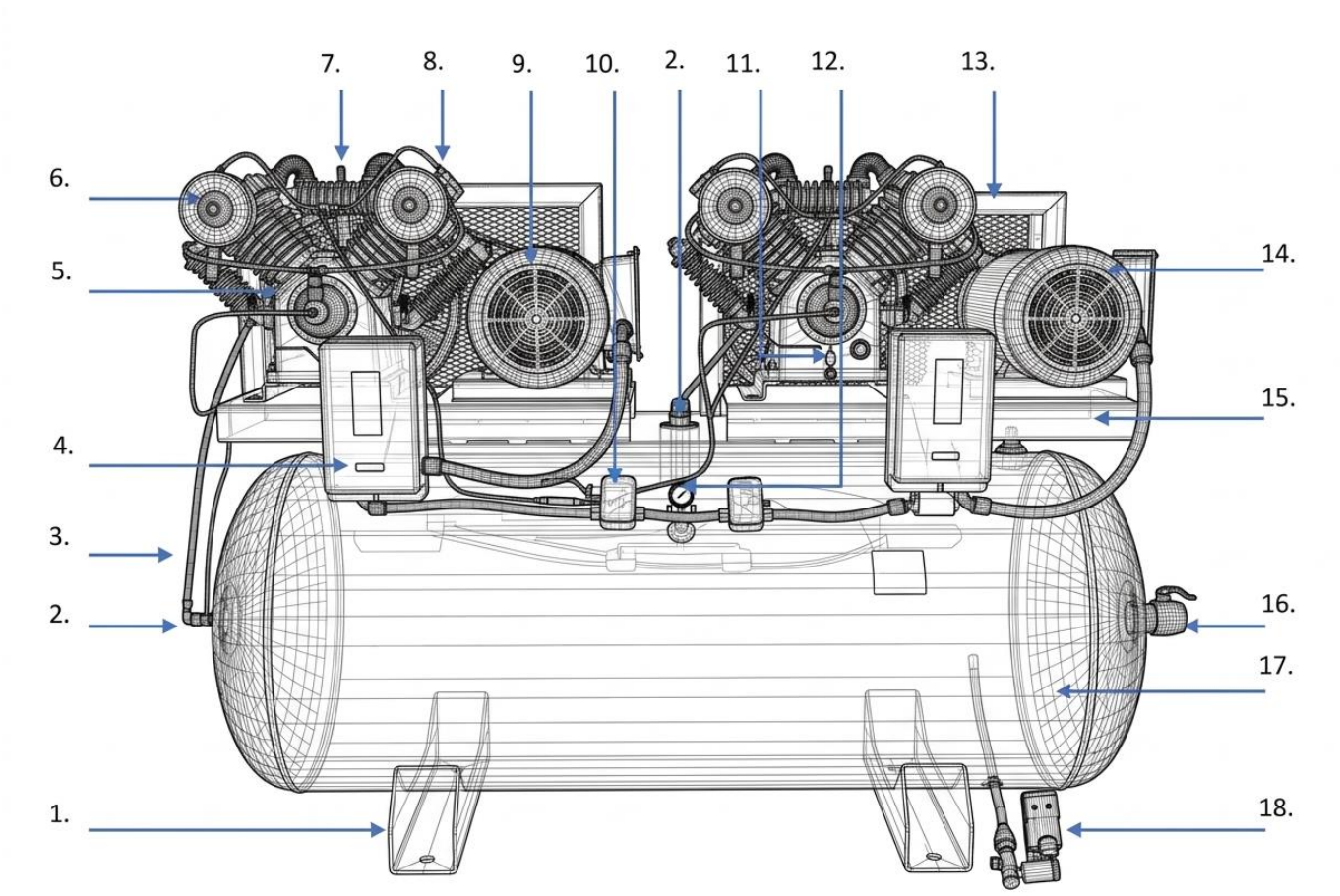

1. Tank foot	2. Check valve
3. Main line, 5/8” copper	4. Magnetic starter
5. Pump	6. Air filter/air inlet
7. Safety pop off valve	8. Head unloader
9. Electric motor	10. Pressure switch
11. Pump oil drain	12. Tank pressure gauge (PSI)
13. Steel belt guard	14. Oil level sight glass
15. Top plate	16. Ball valve (tank outlet)
17. Air storage tank	18. Tank Drain

Features and Extras

Compressors come in many shapes and sizes. Our units have several features that may or may not be present on your unit. These features may be purchased after the fact in kit form. This guide will explain the use and benefit of these features.

Pump Riser

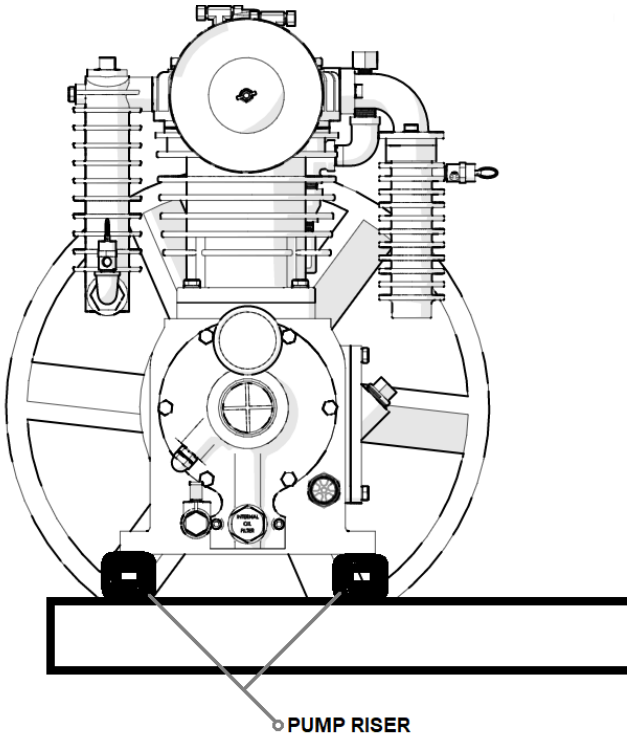

1. Used to elevate the pump off the top plate of the unit.
2. Increased pump height means increases airflow under the pump and therefore increases surface area cooling. This decrease in oil temp will help prolong the life of your pump.
3. Less contact surface for the pump also decreases vibration noise.
4. Risers can be purchased after the fact but may require some other assembly items to install correctly. Consult your sales team for more information.

Belt Tensioner

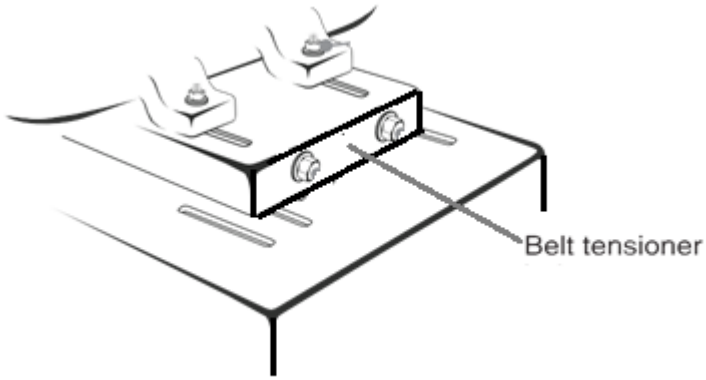

1. Allow the belt to be properly tightened with the turn of a few bolts versus manually loosening and moving the motor by hand and 'guess' adjusting.
2. Allows for fine tuning of pulley and flywheel alignment quickly and accurately.
3. Belt tensioners can be purchased after the fact but may require some other assembly items to install correctly. Consult your sales team for more information.

Continuous Run

Continuous run allows the pump to turn continuously, hence the name. In this mode the unit pumps up to 140 PSI and then the valves are held close. This allows the pump to enter a free spin state where the unit is pulling in cold air and the simply cycling it back to atmosphere. This has several benefits:

1. The pump is cooled during the free spin state since it has no pump load on it.
2. Increased recovery time since the function cycles between 100 and 140 PSI; which is the optimal CFM window for the unit.
3. Wear on your motor is decreased (especially single-phase units) as the unit is already in motion and will not need the large amp draw to overcome zero movement and fight tank compression.
4. Continuous run is best used in applications where CFM cannot be lost. Some examples of this are: media blasting, painting, and prolonged grinding or resurfacing.
5. DO NOT EXCEED 2 hours of continual use without allowing the compressor a rest period.

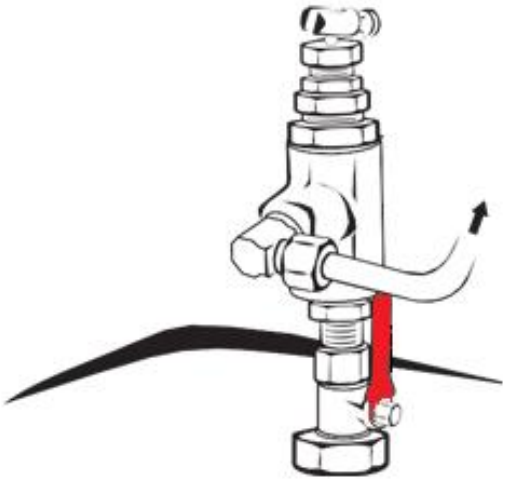

The easiest way to locate the control valve is to follow the ¼” copper line coming from the head on your pump towards the tank. If equipped, the system will be marked with a decal noting it as the continuous run valve.

Air flow is marked with an arrow.

To turn on or off the continuous function, simply turn the ball valve. In this image the handle is marked in red.

Handle in line with the system means it is on, if it is perpendicular to the system, it is off. Continuous run kits are available for purchase on most units if your unit is not currently equipped.

Auto Drain

Auto drains are preset timer valves that allow tank moisture to be vented as long as they are powered. The enemy of every compressor/air system is moisture. The auto drain removes some of the hassle of this by allowing the user to set a timer and walk away from the unit with the piece of mind that their system is protected.

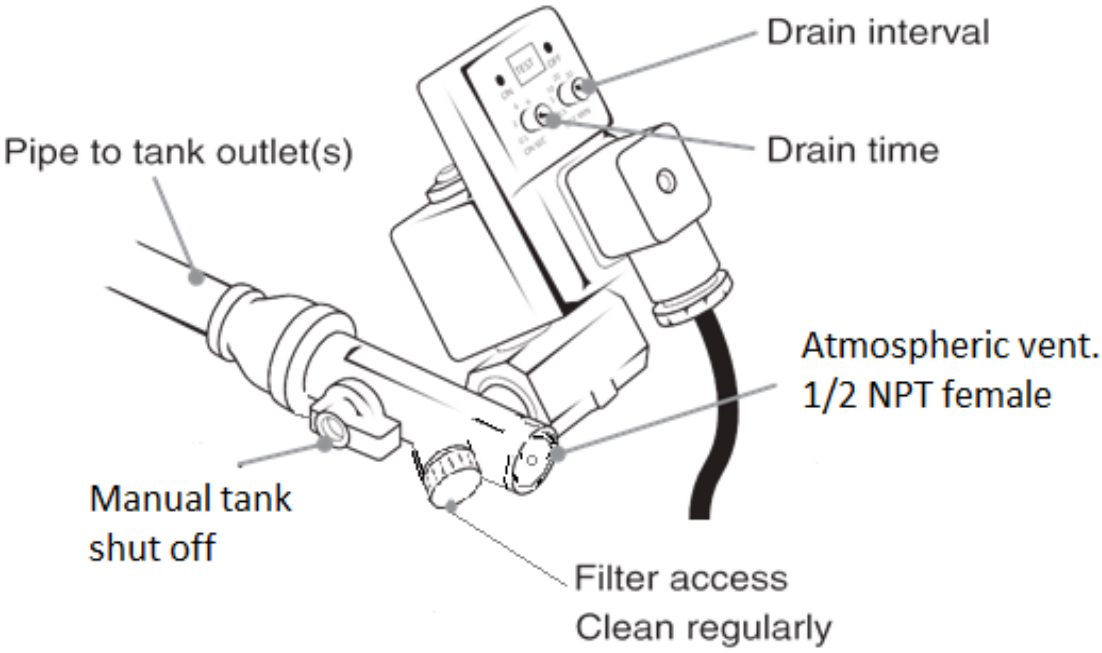

1. The drain works off a conventional 120V outlet.
2. Timer has built in intervals that can be customized to the user need.
3. Has a manual shut off for service and maintenance.
4. The drain filter **MUST** be cleaned weekly to prevent drain blockage.
5. Drain time knob, marked as **ON:SEC**, corresponds to how long the drain will run for when it comes on. This is listed in seconds.
6. Drain interval knob, marked as **OFF: MIN**, corresponds to how long between cycles. Or how long the drain will be OFF before it comes on again.
7. The drain attaches to a ½" NPT female connection.
8. The vent can blow to atmosphere; however, the drain is supplied with a drain silencer system which can be used to muffle the sound of the unit draining. This screws into the atmospheric vent location, however, it is not necessary for operation.
9. A drain system can also be equipped by the user to allow moisture to drain to a separate location.
10. The drain is also equipped with a test button to check function.

Auto drains are not equipped on all units; however, they can be purchased after the fact or during purchase. The piping coming from the tank from factory is ¼" pipe. If purchased after the fact be sure to ask for a coupler to help complete correct install.

Installation

Area

1. Install compressor in a clean, dry, and well-lit area. Be sure installation area can maintain a temperature range between 35˚ - 110˚ F.

> ***CAUTION: If ambient temperature drops below 32˚F, be sure to protect safety/relief valves and drain valves from freezing. NEVER operate compressor with temperatures below 15˚F or above 125˚F.***

2. Allow sufficient space around the compressor for maintenance access and adequate airflow. Mount unit with the belt guard (pulley and flywheel) side to the wall and leave a minimum of 15 inches of clearance.
3. If acid is used in operating environment or air is dust laden, pipe intake to outside fresh air. Increase pipe size by 1/8"' for every 20ft of run. Be sure to install a protective hood at the outside air intake location to prevent debris and foreign objects from blocking the intake pipe.
4. In operating environments where excessive water, oil, dirt, acid, or alkaline fumes are present, a TEFC (totally enclosed, fan cooled) motor is highly recommended. Check nameplates for motor type.
5. Insulate cold water or tother low temperature pipes that pass overhead to avoid condensation dripping on the compressor.
6. In environments where fine dust is common such as granite, marble, or concrete plants the unit must be installed in a separate room with its own dedicated ventilation system.

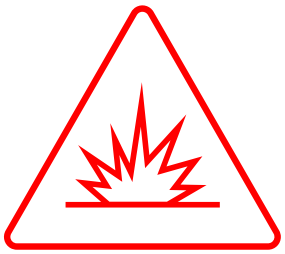

> ***DANGER: DO NOT install compressor in boiler room, paint spray room, or area where sandblasting occurs. Make sure inlet air is away from exhaust fumes or other toxic, noxious, or corrosive fumes or substances.***

7. The unit can be stored outside under the following guidelines: It must be in a covered area out of extreme weather with no ability for moisture to get to the unit, it is also highly recommended that the unit is out of direct sunlight as it can fade and/or damage the coating on the unit. Direct sunlight may also interfere with safety decals on the unit.
8. If the unit is in an enclosed space it requires proper ventilation as the ambient air temp where the compressor is located CANNOT exceed 115 degrees F.
9. Use shims to level the compressor if installation area is not flat. This will help prevent excessive vibration and premature pump wear.

Lifting and Movement/Forklift

1. Make sure lift operator stays aware while moving the compressor.
2. Be sure to uncrate the compressor prior to movement. This will allow a visual reference for the balance of the unit.
3. Be sure the load is secure and well balanced before moving the compressor.
4. Make sure the forks are fully engaged and level prior to lifting or moving the unit.
5. Keep the unit/load as low as possible while moving and refrain from quick changes in direction.
6. For all other forklift safety standards/regulations please reference OSHA 1910.178- Powered industrial trucks.

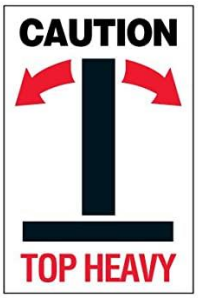

CAUTION: Compressors, especially vertical units, are exceptionally top heavy. Take care when moving and do not make fast or sudden moves during transport.

General Lifting Information

1. Carefully inspect all lifting equipment and ensure it is in good condition. Rated capacity of lifting equipment must exceed compressor weight. **NEVER** lift with under sized or damaged equipment.
2. If using lifting equipment, ensure all lifting points are in good condition and tighten any loose nuts or bolts before lifting.
3. A sling **MUST** be used when moving the compressor with a helicopter or other airborne equipment. Be sure to follow OSHA standards 1910 subpart N.
4. Use guide ropes or equivalent to prevent twisting or swinging of the compressor while it is in the air and **NEVER** attempt to lift the unit in high winds. Keep compressor as low to the ground as possible.
5. Keep all persons away from the compressor when it is lifted. **DO NOT** allow persons under the compressor while it is being lifted.
6. **DO NOT** use bolts or other hooks on individual components to move the compressor.
7. When moving and or placing the compressor ensure it is on/across a surface that can hold the combined weight of the compressor and the loading equipment.

WARNING: Do NOT operate the unit if damaged during shipping, handling or use. Damage may result in bursting and may cause injury to persons or property damage. If the unit is received with damage, please contact customer support as soon as possible.

Anchoring

To ensure proper and safe operation of the compressor the unit is required to be anchored to a flat, smooth, concrete floor. Compressors are also required to be on ¼ inch (6.35mm) **MAXIMUM** thick rubber anti-vibration pads.

Recommended anchor Bolt specifications: wedge anchors; 3/8 in width by 3.5 in length.

How to Anchor the Compressor

1. Make sure the compressor is in the desired location and the anti-vibration pads are under the feet of the compressor.
2. Using the holes in the feet as guides, drill the holes for the anchor bolts through the vibration pads and into the concrete.

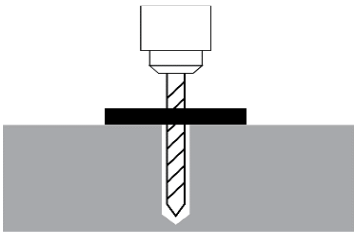

Go in straight; do not let the drill wobble.
Use a carbide bit (conforming to ANSI B212.15).
The diameter of the drill bit **must** be the same as the diameter of the anchor bolt. If you are using a 3/8-inch diameter anchor bolt, for example, use a 3/8 inch diameter drill bit.

3. Thoroughly clean each hole.

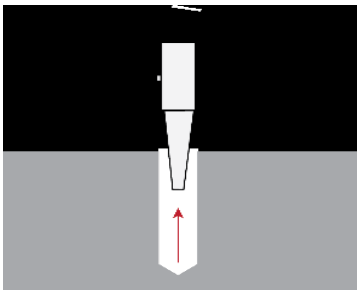

If a vacuum is not available, use a wire brush, hand pump, or compressed air.

DO NOT ream the hole. **DO NOT** make the hole any wider than the drill bit made it.

4. Put the Washer and Nut into place, make sure the top of the Nut is flush with the top of the anchor bolt, then insert the anchor bolt into the hole.
5. Hammer or mallet the anchor bolt down into the hole.

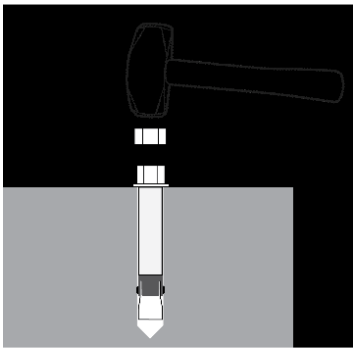

Stop hammering when the washer is snug against the top of the foot.

6. Tighten each nut clockwise**, DO NOT** over tighten**. DO NOT** use an impact to tighten the anchors.

Electrical Safety

1. Follow all NEC and local codes for electrical wiring. Allow only authorized service personnel or certified electricians to install electrical components.
2. Put unit on a dedicated circuit and make sure no other electrical equipment is wired into it. Failure to wire unit on an independent circuit can cause circuit overload and/or imbalance in motor phasing. Install proper No Fuse Breaker (NFB) according to the chart listed below. You may also reference NEC and local codes for additional support.
3. Ensure incoming service has adequate ampere rating.
4. Do not used mixed wire sizes when wiring the unit.
5. The unit must be properly grounded. **DO NOT** connect ground to air or cooling lines.
6. Dual/Alternating units require **two** separate power sources. Ensure both sources are locked out prior to servicing.

DANGER: Be sure only trained and authorized personnel install and maintain this compressor in accordance with all applicable federal, local, and state codes, standards, and regulations. Follow all NEC (National Electric Code) standards especially those concerning equipment grounding conductors.

DANGER: Improperly grounded electrical components are shock hazards. Make sure all components are properly grounded to prevent death or serious injury.

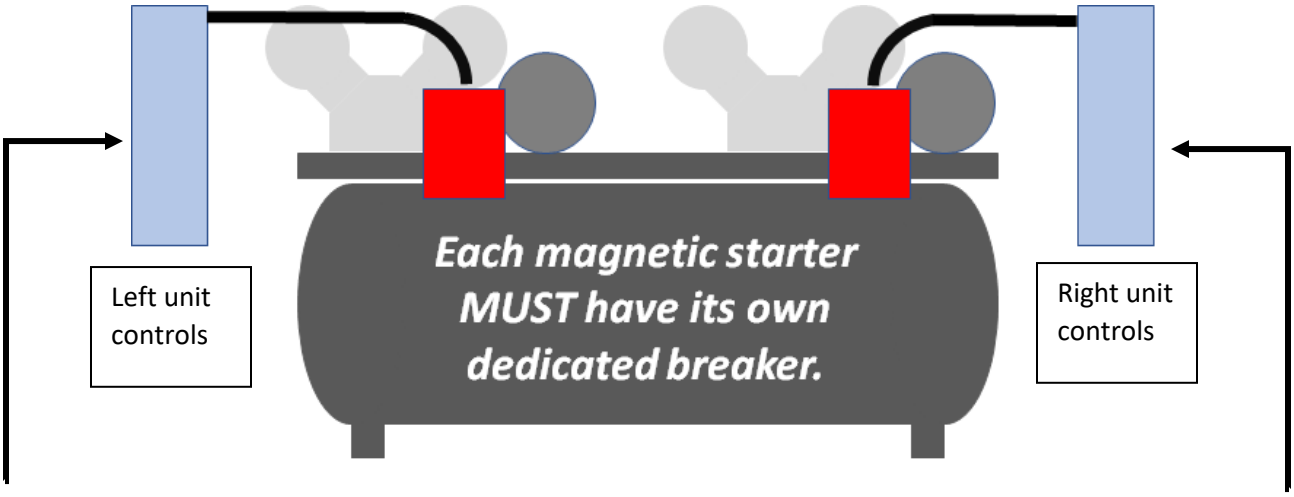

NOTE: On newer dual unit compressors, each magnetic starter box is equipped with an ON/OFF toggle switch. Turning one side off prevents that side from starting but DOES NOT remove power from the unit. The unit is still considered energized. The on and off toggle are designed to be used in the case where one side becomes inoperable or requires non-invasive maintenance such as adding oil, or changing air filters

Wiring the Compressor

All electrical work must be done by a licensed, certified Electrician in accordance with all applicable local electrical codes. Damage caused by improper electrical installation may void your warranty.

WARNING: When wiring units with magnetic starters, DO NOT install power directly to the pressure switch. This can cause fire and possible injury/property damage.

1. Voltage should not vary more than 12% to ensure proper operation of the compressor.
2. Dual units **REQUIRE** two power set ups, one for each unit set on the compressor.
3. Unit must be on two **SEPARATE** breakers.
4. Wire size and breaker requirements for single phase units:**

Motor Horsepower	Breaker Size (Amps)	Wire Size (50ft or less)*	Wire Size (More than 50ft)	Peak Start Amps (Locked Rotor)
5	40	8 gauge	Consult Electrician	135
7.5	50	6 gauge	Consult Electrician	210
10	60	4 gauge	Consult Electrician	270

5. Wire size and breaker requirements for 3 phase units:**

Motor Horsepower	Breaker Size (Amps) 208-230 V	Breaker Size (Amps) 460 V	Wire Size (50ft or less)* Low Volt / High Volt	Wire Size (More than 50ft)
5	30	15	10 / 14	Consult Electrician
7.5	40	20	8 / 12	Consult Electrician
10	50	25	8 / 10	Consult Electrician
15	70	35	6 / 10	Consult Electrician
20	125	50	4 / 8	Consult Electrician
25	125	60	3 / 6	Consult Electrician

***Wire size distances are from unit to the panel where the breaker is housed.**

****CAUTION: Under sizing wires and/or breakers can cause damage to the unit, possible injury to personnel, and void your warranty.**

6. Dual unit wire diagram. Color is used for wire diagram purposes only and does not have any correlation to wire selection. For single phase set ups, set up will be the same, but there will not be a 5L3 terminal.
7. Incoming power must go to **SINGLE PHASE: 1L1 and 3L2. THREE PHASE 1L1, 3L2, and 5L3.**

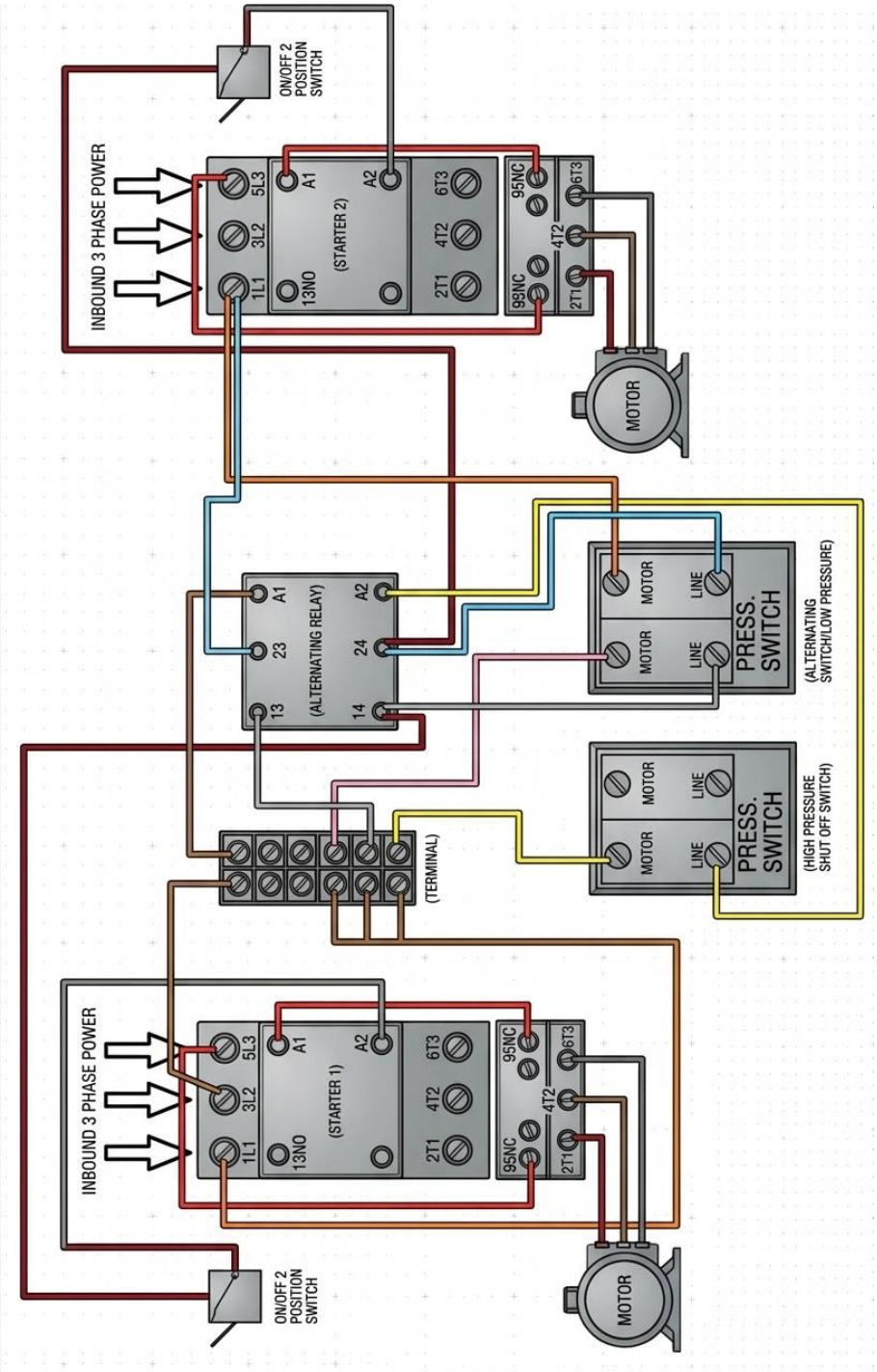

- **Pressure switch sees a drop in pressure, tells the alternating unit to turn on whichever starter it is assigned.**
- **Starter pulls in, sends power to motor.**
- **If pressure drops too low, the alternating switch kicks on turning on the other unit.**
- **As pressure builds, the alternating pressure switch shuts off one unit.**
- **The high-pressure switch cuts out when the system reaches high pressure.**
- **When the unit shuts off, the high pressure switch relieves head pressure.**
- **The shut-off also changes the relay contacts over so the next time the unit needs air, the opposite side starter will be the main.**

8. During initial start up of 3 phase unit, observe flywheel rotation. Facing the front of the compressor (Pressure switch/pressure gauge) rotation should be clockwise.
9. Unit I**S NOT** interchangeable between voltages.

Piping (Safety steps)

1. Install appropriate flow-limiting valves as necessary according to pipe size(s) used and run lengths. This will reduce pressure in case of hose failure, per OSHA Standard 29 CFR 1926.302(b)(7).
2. Flow-limiting valve are listed by pipe size and rated CFM. Select appropriate valves according to manufacturer's recommendations.
3. Use a flexible connector between compressor tank and dryer/piping system to minimize noise, vibration, pump wear, and to prevent damage to the unit or piping system.
4. Install ASME code safety valves and ensure piping system is equipped with adequate condensate drains.

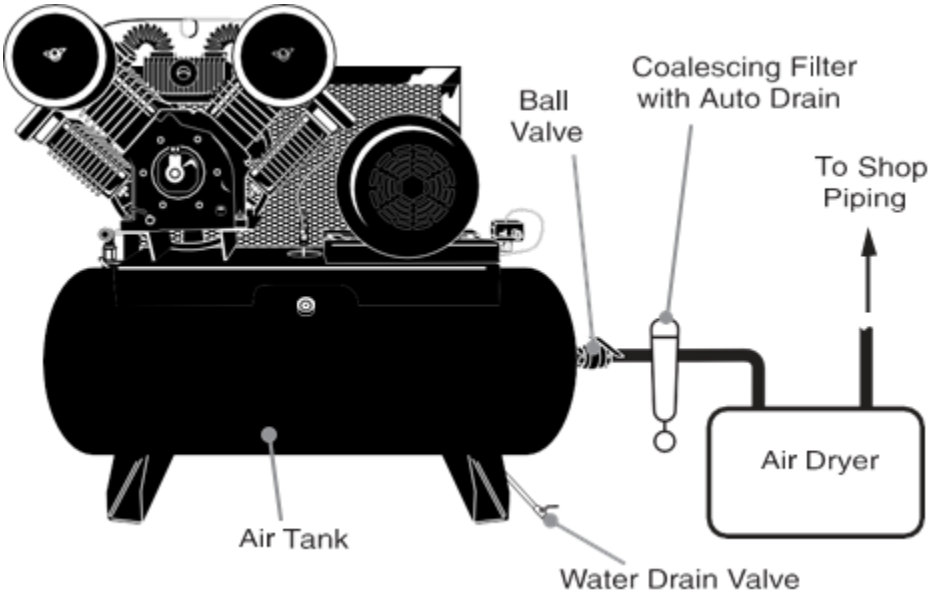

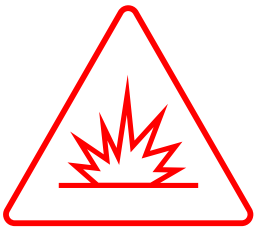

DANGER: NEVER install a shut off valve such as a glove or gate valve between the pump discharge and the air tank unless an ASME rated safety valve rated for the correct pressure is installed in the line between the valve and the compressor pump.

5. Minimum pipe size for compressed air lines: (Pipe sizes are shown in inches)

CFM	25ft	50ft	100ft	250ft
20	¾	¾	¾	1
40	¾	¾	1	1
60	¾	1	1	1
100	1	1	1	1 – ¼
125	1 – ¼	125	1 – ¼	1 – ½

6. Air systems should be checked daily for leaks. This helps to prevent unnecessary load on the compressor and helps increase energy savings.
7. Examples of air systems:

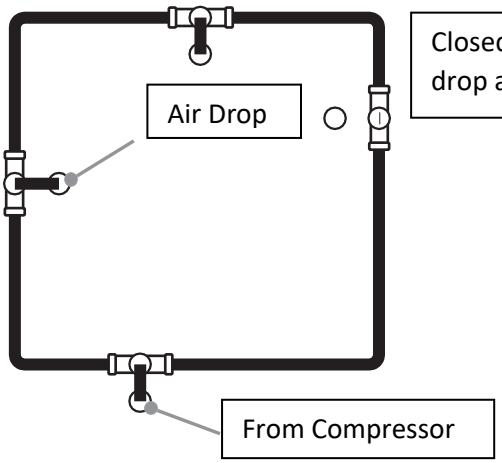

Closed loop system. Install tee fitting in piping from air to minimize pressure drop and to allow air flow in two directions.

Air Drop: Install tee fitting with branch to top to minimize condensation.

Elevation View

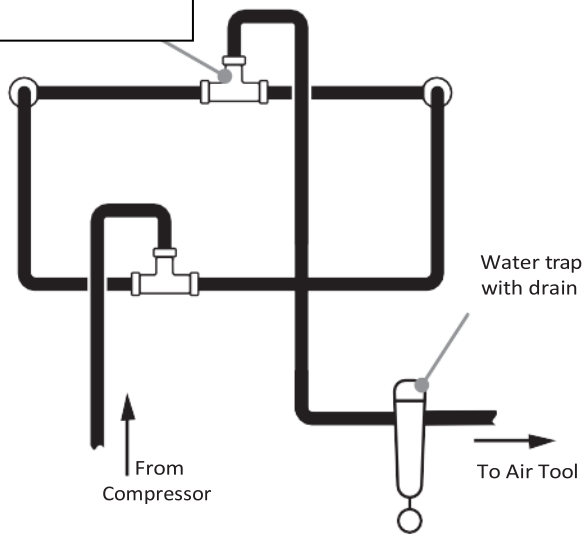

8. Make sure any tube, pipe, fitting, or hose connected to the unit can withstand operating temperatures and retain pressure.
9. Never use reducers in discharge piping. Keep all piping and fittings the same size in the piping system.

WARNING: Never use plastic (PVC) pipe for compressed air. Serious injury or death could result. Piping MUST have a pressure rating of 200 PSI or greater.

Pre-Use Inspection

1. The unit is shipped with pump break-in oil and should be ready to operate. Be sure to check for proper oil level before running the compressor. Break in oil should be change after 70 Hours of operation (active pumping time). See maintenance section for more information on oil changes and frequency.

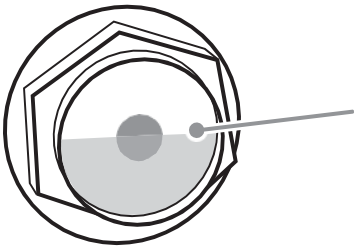

Oil level should be to the center of the red circle in the sight glass. Oil level WILL drop once the unit turns on and oil begins to circulate.

2. Check for proper belt tension. There should be ½ inch of belt slack/deflection. Refer to maintenance section if adjustment is necessary.
3. Inspect belts for frays or unit for an excess buildup of black rubber dust indicating belt wear.

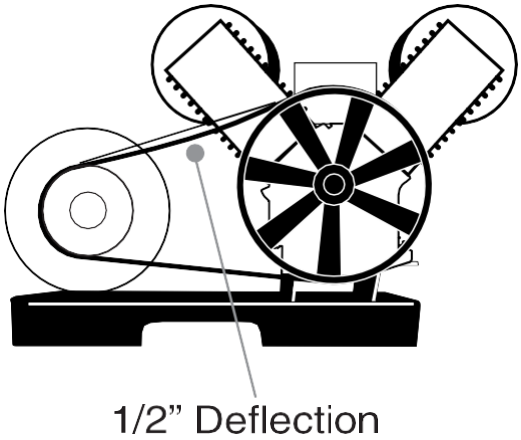

Proper belt tension is determined by pressing midway between the motor pulley and the pump flywheel.

4. Check proper operation of all pop off safety valves on unit. Pull rings on valves to ensure they move and are free of any obstructions. **DO NOT** pull the safety valve on the tank if there is air in the tank!
5. Inspect all air lines/piping for proper for secure fit and corrosion or line degradation. **DO NOT** operate the compressor with damaged lines. **DO NOT** use damaged or cracked air lines as a rupture could result in damage/injury to personnel or property.
6. **WITH UNIT LOCKED OUT** (power off at source i,e. the electrical panel/disconnect) ensure all electrical wiring, including all terminals, are in good condition and are free of buildup, fraying, cracks or discoloration replace as needed. Check tightness of bolts securing wiring in place.
7. Ensure unit is secured in place and has not shifted. Verify anchor bolts are in place and are in good condition.
8. Remove any loose items from around/on compressor to avoid damage to the unit. Examples would be loose clothing items, rags, papers, bottles, or any item that may have been placed on the unit.
9. Check unit for any oil leaks. If leaks are found contact manufacturer for further instructions.
10. Unit should **NEVER** be operated without the belt guard in place.
11. Inspect Flywheel for cracks or missing fins. **NEVER** operate a unit with a damaged flywheel; serious injury or death could result. If you suspect your flywheel may have been damaged, contact technical assistance and **DO NOT** allow the machine to be operated.

Operation

Ensure all personnel that work around or operate the compressor have read this manual and are well versed in the operation of this machinery. NEVER allow untrained personnel to operate this unit.

1. Once the inspection is completed, open your discharge port (outlet ball valve). This should already be connected to your shop airline system.
2. Ensure all personnel are clear of the compressor and aware that it is being started.
3. Turn the selector on your pressure switch to AUTO. This will start your compressor and allow it to fill. The tank will fill to 175 PSI, and unless otherwise noted, will shut off. The unit will begin pumping again once the tank is drained down to approximately 135 PSI. ***This may vary based on features, if your unit is equipped with **CONTINOUS RUN**, the unit may perform differently then specified in this step. (Check the **FEATURES** section for more information)
4. Oil pressure on start up will vary due to ambient temperatures but should not exceed 100 PSI. Once the unit is allowed to run a few cycles and come to optimal operating temperature, oil pressure should stabilize at 20-35 PSI. If the oil pressure remains high or drops too low, it can be adjusted as follows:

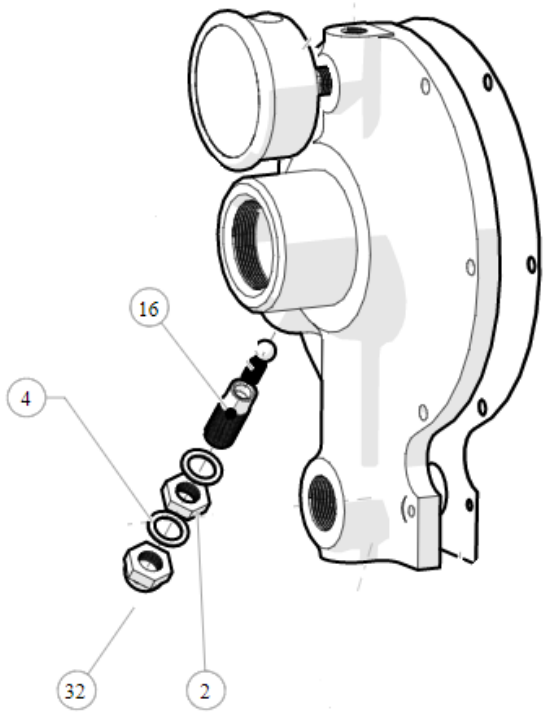

When facing the oil pressure gauge. Look to the 7 o'clock position. You will see an acorn nut (#32). Remove the acorn nut and be careful to not lose the rubber seal (#4) sitting behind it. Loosen but do not remove the set nut (#2). You will see a flat head screwdriver slot in the end of the adjustor (#16). To increase pressure, turn the adjustor clockwise; to decrease pressure turn then adjustor counterclockwise. Turn no more than ½ turn at a time. Then allow the unit to cycle to measure the adjustment.

TAKE CARE when lowering pressure not to back the adjustor out completely.

Once oil pressure is set, hold the adjustor (#16) in position and retighten set nut (#2). Replace rubber seal (#4) and reinstall acorn nut (#32).

FAILURE to reinstall acorn nut, seals, or set nuts can result in oil leaks.

Pump Up Time (General)

Horsepower	Tank size (gallons)	Average pump up time (empty to full 175 PSI) times may vary +/- 20%
5	80	7 min 15 seconds
7.5	80	5 min 10 seconds
10	80	4 min 10 seconds
15	120	3 min 50 seconds
20	120	3 min 30 seconds
25	120	2 min 15 seconds

*Pump up times are based on averages.

Maintenance

Compressor maintenance must be performed as described in the maintenance schedule, failure to do may lead to compressor/component breakdown and void compressor warranty.

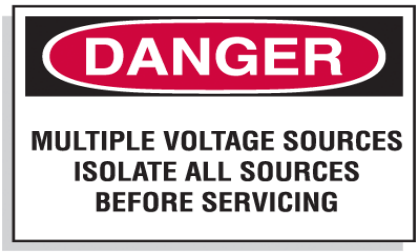

DANGER: Prior to performing any maintenance on the compressor, ensure compressor is disconnected from its power sources and cannot be re-energized until the maintenance to be preformed is complete. DO NOT perform maintenance with pressure in the tank. Relieve pressure prior to maintenance being started.

Maintenance Schedule

The table below is a generalized maintenance schedule based on the normal usage of a compressor. Your specific needs may vary based on operating environment and duty.

Item	Frequency	Comment
Cleanliness	Daily	Keep the compressor and the surrounding area clean. Wipe off oil, spills, and dirt/dust.
Oil Level	Daily	Check oil level while the unit is **OFF.** If oil is low add to fill point. If level is high, drain off oil.
Tank Pressure	Daily	Check unit for air leaks.
Tank	Daily	Drain the tank daily at the end of use. **DO NOT** attempt to store air for prolonged periods of time. The electrical cost is minuscule compared to replace a rusted out or ruptured tank. **DO NOT** attempt to repair a damaged tank.
Anchors	Weekly	Ensure anchors are holding the unit securely and are not loose.
Anti-Vibration Pads	Weekly	Check for wear. Verify they are in place and not damaged or rotted.
Belt	Monthly	Verify belt tension. Replace if excessively loose or damaged.
Environment	Quarterly (four times per year)	Air temperature should not exceed recommended levels. Humidity where compressor is stored should not exceed 70%. Consider relocating compressor if these conditions cannot be met.
Wiring	Semi Annually (twice a year)	Have an electrician check connection from power supply and all subsequent connections on the unit.
Tank	Yearly	Inspect for rust or corrosion. **DO NOT** attempt to repair a damaged tank.
Entire Unit	Yearly	Lock unit out and detail clean.

Air Filter(s)*	See Comments	Air filters should be changed after the first -hour break in period and every 90 days after that. The frequency will increase in environments with air contaminants such as dust, paint, dirt, etc.
Oil*	See Comments	Oil should be changed after the first 70-hour break in period and every 90 days after that. This will increase in frequency depending on actual compressor use and hours unit is running.
Oil Filter*	See Comments	The oil filter on the unit must be replaced with every oil change.

*Frequency of these changes are a generalization and may be subject to change based on compressor environment, hours, and application.

Oil Choice

The lubricant should be a premium synthetic, SAE grade 30, non-detergent compressor oil. It is highly recommended to use only Eaton Compressor Piston Oil. Refer to the Extended Warranty guidelines for oil selection and frequency of use.

Oil Disposal

Compressor oil is not trash and **MUST NOT** be disposed of in regular trash or discarded into the environment. You **MUST** dispose of waste oil from your unit per all applicable federal, state, and/or local codes. Failure to do so may cause damage to the environment and subject yourself and/or your business to fines and legal issues.

Oil Change

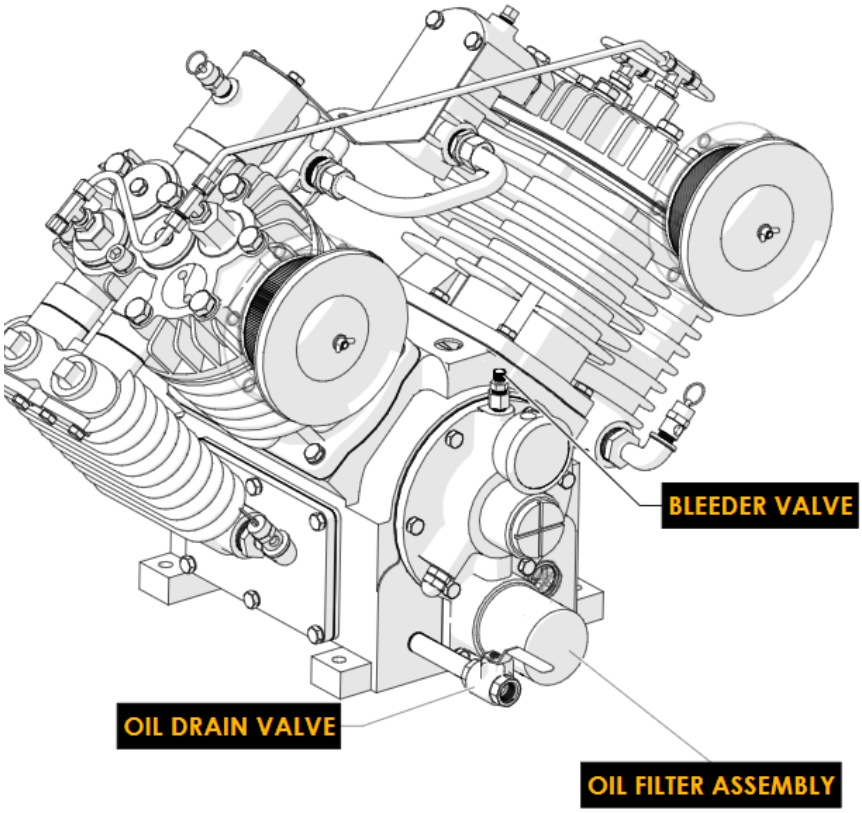

TURN POWER OFF TO THE COMPRESSOR TO AVOID AN INADVERTANT START CONDITION.

OPEN THE DRAIN VALVE. ONCE THE OIL HAS COMPLETELY DRAINED CLOSE THE VALVE.

NEXT REMOVE THE OIL FILTER ASSEMBLY BY ROTATING COUNTER CLOCKWISE. APPLY A LIGHT COATING OF OIL ON THE NEW FILTER GASKET AND INSTALL. HAND TORQUE FILTER FIRMLY

IT MAY BE NECESSARY TO OPEN THE BLEEDER VALVE 1 FULL ROTATION PRIOR TO START TO ALLOW PUMP TO PRIME. ONCE OIL IS PRESENT AT BLEEDER CLOSE THE VALVE.

CAUTION: ALLOWING THE PUMP TO OPERATE FOR MORE THAN 8 SECONDS WITHOUT OIL PRESSURE COULD DAMAGE BEARINGS.

REQUIRES 2 QUARTS OF COMPRESSOR OIL P/N OIL004 (STANDARD SYNTHETIC GRADE)

TO PROTECT YOUR EXTENDED WARRANTY ONLY USE EATON COMPRESSOR AUTHORIZED OIL P/N OILPIS102Q PREMIUM GRADE 2 QUARTS REQUIRED.

Troubleshooting

Some unit issues can be fixed simply by verifying the following guide. It is advised to go through the guide prior to calling technical support to help expedite the assistance process.

Issue	Action
Compressor does not run	Check unit power supply. Verify incoming voltage from power supply to unit. Check that breakers are functioning correctly. Verify wiring is connected correctly and not loose.
Compressor cycles frequently	Check for leaks in facility/shop air lines or air system. Check for stuck tools or machine leaks. Check pressure settings and PSI cycle settings on switch.
Compressor does not reach pressure	Check unit is not running in continuous run, check FEATURES section for more information. Check CFM consumption of machines to ensure they do not exceed compressor capability. Check tools for **CONSTANT CFM** rating, not average. Average ratings do not reflect consumption and are often 66% lower than actual CFM consumption Check for leaks in air lines or on unit.
Oil level low	Verify oil level while unit is off and cool. Top oil off and monitor oil level. If it drops again check for oil leaks and check correct oil is being used
Compressor is running loud	Ensure anchor bolts are in use and are snug. Check vibration pads for excess wear, replace as needed. Ensure unit is not hard lined to air system. Unit should be connected by flexible hose to air systems to prevent vibration noise. Check oil pressure if there is no oil pressure shut unit down and contact customer support.
Compressor will not shut off	Check incoming power location. If wired incorrectly power is going directly to motor and can cause tank damage. Shut unit down and verify wire diagram. If problem continues contact customer support.
Magnetic starter has kicked off	Verify duty cycle on unit. It should not exceed 60-40 run/rest cycle if it does consider upsizing unit and/or tank size. Thermal overloads are designed to protect the motor from overheating. Overusing unit can cause thermal overloads to trip. Allow the unit to cool, reset magnetic starter and continue use. If problem occurs again contact customer support.
Getting oil blow by	Verify pump has passed the break in time: 150-200 hours of active run time. Ensure unit is not running in continuous mode prior to break in period being completed (this can cause increase blow by during break in). For cases after break in period contact customer support.

Warranty Statement

- ***Standard Warranty:*** That each compressor unit is free from defects in material, workmanship, and parts for 1 year from the date of delivery. This Standard Warranty includes 1 year of warranty labor from an authorized technician. Manufacturer is not responsible for downtime during warranty service. If downtime is necessary, it is at the owner's discretion, obligation, and expense, to have a redundant compressor.

- **Parts shipped for warranty repairs shall only include ground freight charges for the first 90 days of the warranty period, thereafter owner is responsible for all freight charges of parts shipped for warranty**. Any and all express shipping charges of warranty parts would be at the owner's expense. Standard technical assistance is provided at no charge during and after the standard warranty period.

****Standard warranty has no obligation to maintain warranty status, warranty will expire one year from date of delivery. Please see available options below to extend your warranty.***

- ***Extended Warranty:*** Manufacturer will extend your standard 1-year warranty to full 5 years when you opt to register for the extended warranty plan that includes using our **SMART OIL™** and following all routine maintenance set forth. Parts shipped for warranty repairs shall only include ground freight charges for the first 90 days of the warranty period, thereafter owner is responsible for all freight charges of parts shipped for warranty. Any and all express shipping charges of warranty parts would be at the owner's expense. Standard technical assistance is provided at no charge during and after the standard warranty period.

Required maintenance schedule to maintain warranty status.

- All units are shipped with break-in oil and must be changed no less than 70 hours to insure gasket seating.
- After the 70 hours of break-in, you must change the oil.
- Thereafter Oil Should be changed every 6 months or 1000 hours whichever occurs first.
- Always maintain proper oil level in unit. If the unit runs out of oil due to neglect the warranty will be void.
- Use only manufacturer approved oils in your compressor, or your warranty is void.
- All stock orders by vendor/purchaser are required to purchase two service kits at time of purchase per unit.
- All stocking orders will have a 6-month grace period for warranty registration. After that time the unit must be registered, or warranty may be void.

*****Extended Limited Lifetime Pump Warranty*** With participation in our **SMART OIL™** extended auto ship program will extend your warranty plan to **Limited Lifetime Warranty on the pressure lubricated pump. All other non-wear and tear components to 10 years. **SMART OIL™** not only extends the life of your compressor pump, it also can reduce operating noise levels and can create further energy savings. Warranty repair parts under the Limited Lifetime warranty will not include any shipping charges beyond the Standard Warranty, therefore owner is responsible for all freight charges for warranty parts. This plan includes our advanced technical air support. Smart Tech Support provides you with the highest level of technical support. Smart Tech support is an interactive support team available to you at your fingertips by just downloading a free app. The app provides free remote meetings, interactive touch display, real live personal to assist.

Limited Lifetime Warranty is not prorated and has no hour limits.

**Limited Lifetime Warranty, non-prorated, no hour limits. In the case the product has been discontinued at any point the Limited lifetime Pump warranty will last five years past the discontinued date. Warrantor has discretion to substitute parts with current model for the five-year duration.

In order to maintain Limited Lifetime Warranty status, the owner must adhere to and purchase the required maintenance items as scheduled below utilizing our Smart Whisper Blue Auto Ship program:

Required maintenance schedule to maintain warranty status.

- All units are shipped with break-in oil and must be changed no less than 70 hours to insure gasket seating.
- After the 70 hours of break-in, you must change the oil.
- Thereafter Oil Should be changed every 6 months or 1000 hours whichever occurs first using only our Smart Whisper Blue Oil
- Always maintain proper oil level in unit. If the unit runs out of oil due to neglect the warranty will be void.
- Use only Smart Whisper Blue Oil and filters purchased from original manufacturer in your compressor, or your warranty will be voided.
- Must be an active member of auto ship program.
- All stock orders by vendor/purchaser are required to purchase two service kits at time of purchase per unit.
- All stocking orders will have a 6-month grace period for warranty registration. After that time, the unit must be registered, or warranty may be void.

- **Warranty shall not apply, and manufacturer shall not be responsible nor liable for:**

  - Routine service such as oil changes, filter replacements, gasket tightening to correct oil seepage or drive belt tightening and valve cleaning and are not covered under warranty.
  - Consequential damages such as but not limited to cost of loss of business, product damage, or down time.
  - Acts of nature, over abuse, malicious destruction, improper maintenance, undersized equipment
  - In the case the product has been discontinued at any point the *Limited lifetime warranty will last five years past the discontinue date. Manufacturer has discretion to substitute parts with current model for the five-year duration.
  - Deviation from operating instructions or specifications
  - Labor charges for repairs or maintenance made by person(s) other than an authorized, approved service technician or any labor after the 1-year Standard Warranty expires.
  - Normal wear and tear parts included but not limited to valves (intake/suction, check, blowdown, thermo, pop off, unloader), and ball valves. Belts, shaft seals, load/unloader solenoids, sensors (temperature or pressure), Electrical contractors and relays, and any parts with a routine maintenance schedule

Warranty shall be voided under the following conditions: Exposing electrical components to rain or water or installing the unit in a hostile environment such as acid vapors or any caustic or abrasive matter that may be ingested into the pump or installing the unit in an enclosed area where lack of cooling ventilation is present, such as in boiler or equipment rooms where the ambient air exceeds 100F.

Further exclusions include failure to fully and completely follow the guidelines set forth in the manual. Of specific note is environments where fine dust is common, such as granite, marble or concrete plants, the compressor MUST be installed in a separate area with its own dedicated ventilation. **FAILURE TO PROVIDE THIS DUST FREE OPERATING AREA VOIDS THE WARRANTY.**

Parts used for warranty purposes must be supplied by original manufacturer. Warranty work should be performed only by an approved technician. If any maintenance (other than routine maintenance) is performed by a non-approved Technician, written pre-approval must be obtained from manufacturer, to prevent voiding this warranty. Failure to fully comply with this warranty and fully comply with the manual instructions will void this warranty.

The oil purchase and maintenance program are effective as of Jan.2020

Maintenance Log